# Model ST430/ST430L

## OWNER'S MANUAL

STEREOPHONIC
TUNER

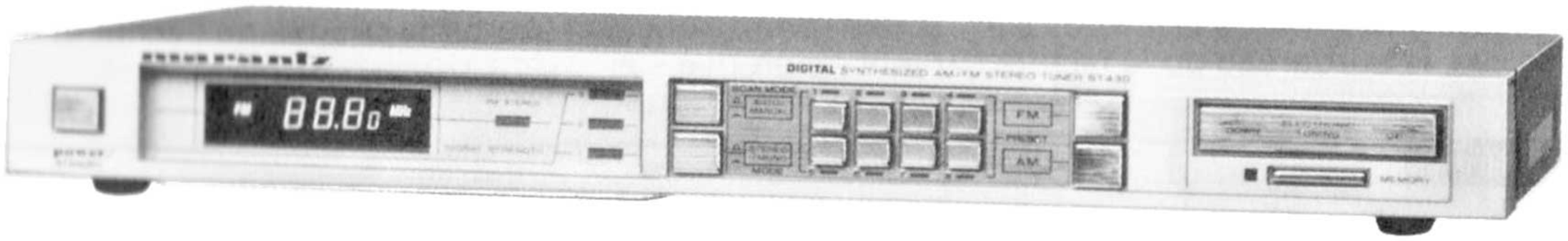


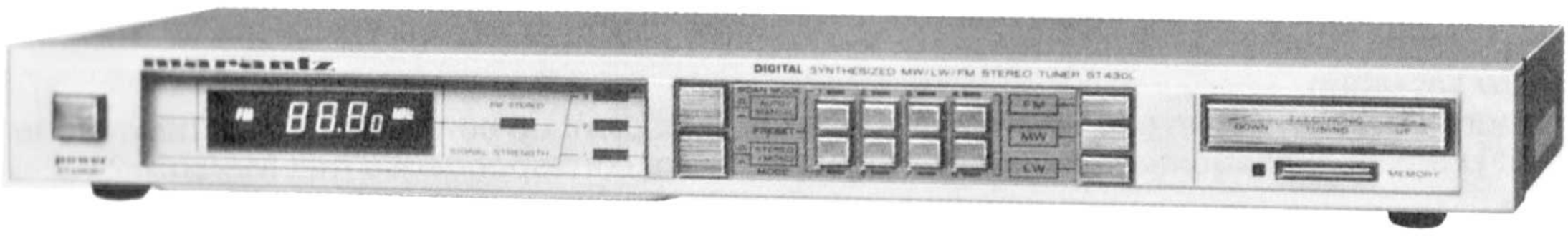


marantz®

www.hifiengine.com

# MODEL ST430/ST430L TECHNICAL SPECIFICATIONS(DIN)

## FM TUNER SECTION

| | |
|---|---|
| Frequency Range | 87.5 ~ 108 MHz |
| Usable Sensitivity | |
| Mono (S/N 26 dB, 75 ohms) | 0.7 μV |
| Stereo (S/N 46 dB, 75 ohms) | 25 μV |
| Alternate Channel Selectivity 98 MHz | 63 dB |
| Image Response Rejection | 48 dB |
| IF Rejection | 70 dB |
| Spurious Response Rejection | 75 dB |
| AM Suppression | 55 dB |
| Signal-to-Noise Ratio | |
| Unweighted Mono | 70 dB |
| Stereo | 63 dB |
| Weighted Mono | 76 dB |
| Stereo | 68 dB |
| Pilot Signal & Subcarrier Rejection | |
| 19 kHz | 35 dB |
| 38 kHz | 45 dB |
| Total Harmonic Distortion | |
| Mono | 0.1% |
| Stereo | 0.2% |
| Frequency Response | |
| 30 Hz ~ 15 kHz | +0.5 dB, −1.5 dB |
| Separation | |
| Stereo | 45 dB |
| Channel Balance | 0.2 dB |

## MW TUNER SECTION

| | |
|---|---|
| Frequency Range | 522 ~ 1611 kHz |
| Usable Sensitivity 20 dB S/N 30% Mod., 999 kHz | 500 μV/m |
| Selectivity 999 kHz, ±9 kHz | 30 dB |
| Image Rejection, 999 kHz | 40 dB |
| IF Rejection, 999 kHz | 55 dB |
| Signal-to-Noise Ratio, 999 kHz | 43 dB |
| Total Harmonic Distortion, 999 kHz | 1.2 % |

## LW TUNER SECTION

| | |
|---|---|
| Frequency Range | 153 ~ 360 kHz |
| Usable Sensitivity 20 dB S/N 30% Mod., 250 kHz | 800 μV |
| Image Rejection, 250 kHz | 50 dB |
| IF Rejection, 250 kHz | 50 dB |
| Signal-to-Noise Ratio, 250 kHz | 43 dB |

## GENERAL

| | |
|---|---|
| Power Requirements (ST430) | 110–120/220–240 V AC, 50/60 Hz |
| (ST430L) | 220–240 V AC, 50/60 Hz |
| Dimensions | |
| Panel Width | 416 mm |
| Panel Height | 37 mm |
| Depth | 192 mm |
| Weight | |
| Unit Alone | 1.7 kg |

www.hifiengine.com

## Model ST430

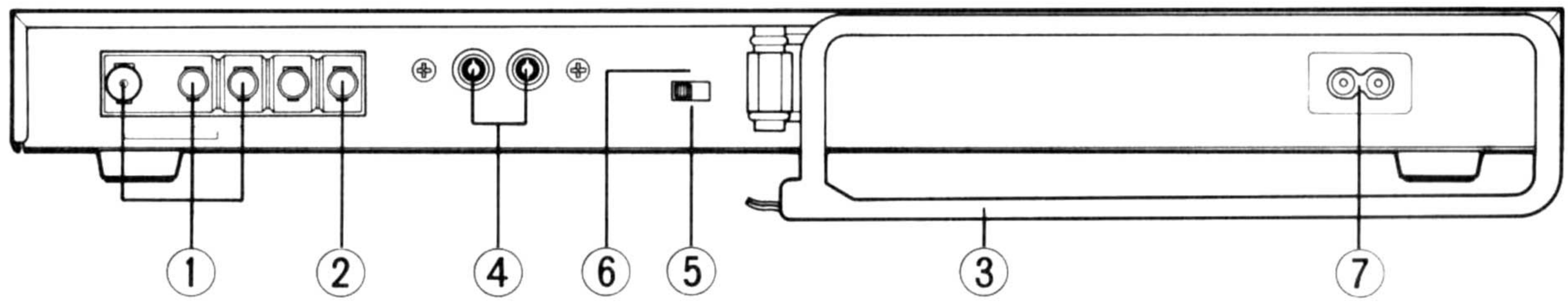


## Model ST430L

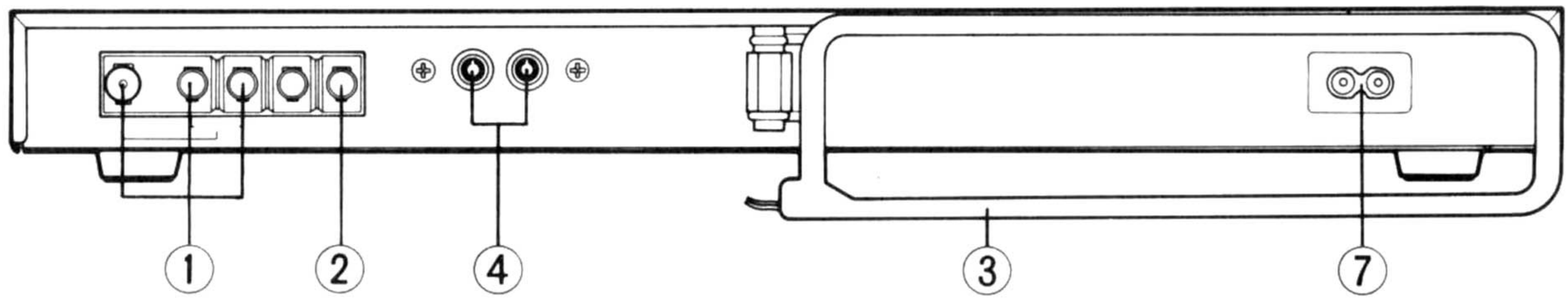


**Figure 1. Rear Panel**
**Figure 1. Panneau arrière**
**Abbildung 1. Geräterückseite**

## Model ST430

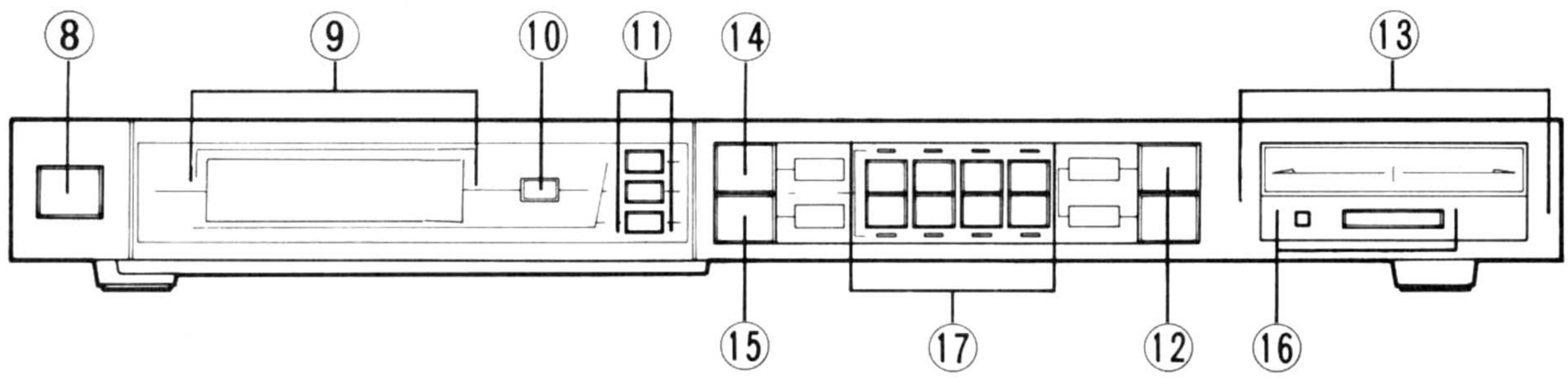


## Model ST430L

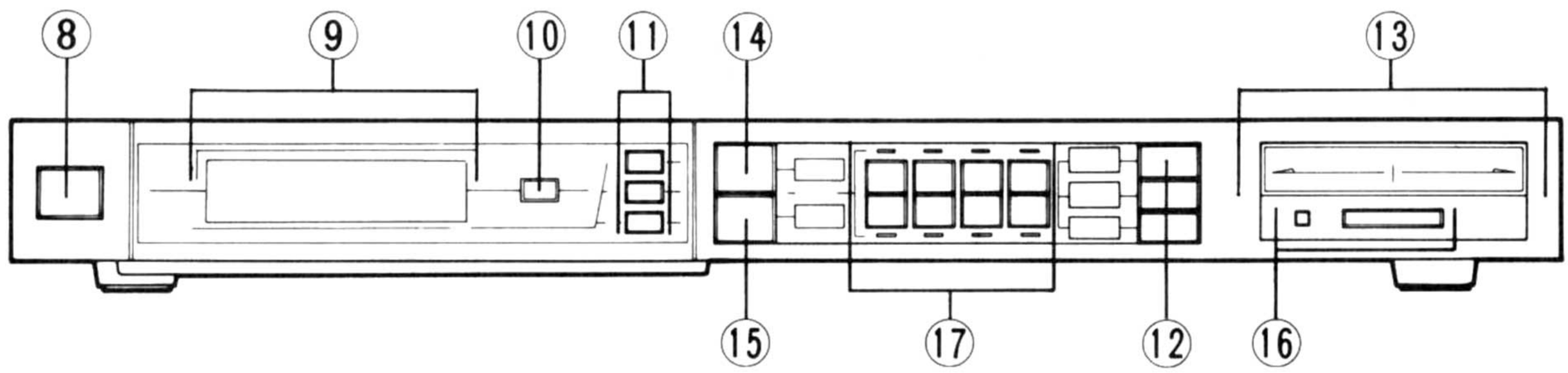


**Figure 2. Front Panel**
**Figure 2. Face avant**
**Abbildung 2. Gerätevorderseite**



www.hifiengine.com

## FOREWORD

Your Marantz product has been specially prepared to comply with the household power and safety requirements that exist in your region. This product has a 2-position voltage selector (110–120/220–240V) on the bottom panel (A, N and T versions). Since the voltage has been adjusted as shown below upon shipment from the factory, please check the third alphabetical letter of the serial number and refer to the following table to note the characteristics of the model in your possession:

| SUFFIX | VOLTAGE |
|---|---|
| A – | 240V AC, 50/60 Hz |
| C – | 120V AC, 60 Hz |
| U – | 120V AC, 60 Hz |
| N – | 220V AC, 50/60 Hz |
| T – | 240V AC, 50/60 Hz |

### FOR UNITS SOLD IN THE UNITED KINGDOM

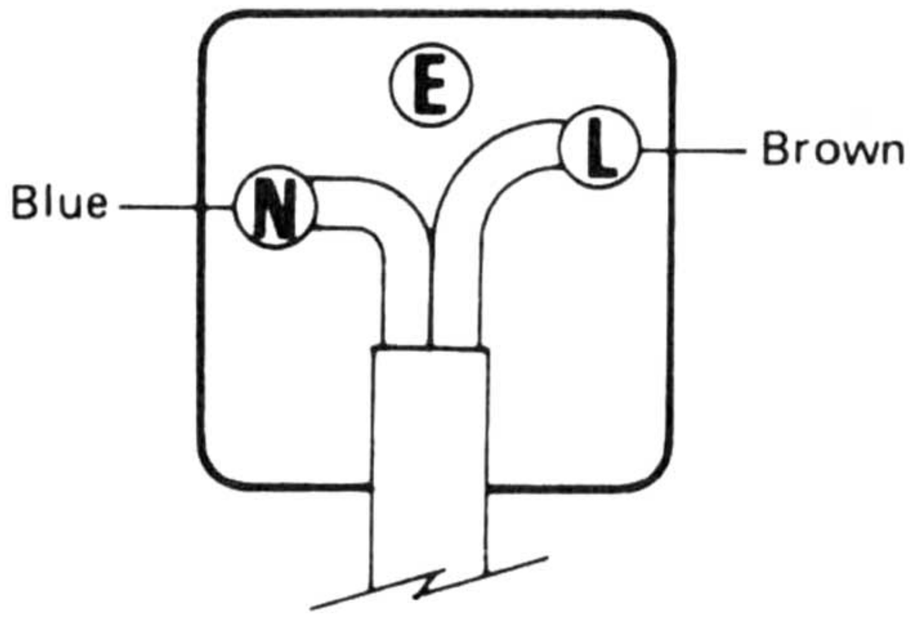


### IMPORTANT

The wires in the mains lead are colored in accordance with the following code:

Blue – Neutral
Brown – Live

As the colors of the wires may not correspond with the terminal identification in your plug, proceed as follows:

- Connect the brown wire to the terminal marked "N" or colored brown or red.
- Connect the blue wire to the terminal marked "L" or colored blue or black.

For 13A plug, conforming to BS1363, use a 3A fuse.

For other plugs, use a 5A or lower fuse in the plug or adaptor or at the distribution board.

## ABOUT THIS MANUAL

Refer to the figures given on page 3 . The callout numbers correspond to those found in this manual. All references to the connections and controls are printed in **BOLDFACE** type as they appear on the unit.

## REAR PANEL CONNECTIONS

All connections to the rear panel should be made with the power to the entire system turned off. To avoid confusion, connect one cable at a time between the different components of your system. This is the safest way to avoid cross-connecting channels or confusing signal inputs with outputs.

Since the loop antenna is not connected to the tuner, begin installation by installing the loop antenna. (See Figure 6 )

### (1) FM ANTENNA

Included in the accessory kit is a ribbon-type "folded dipole" FM antenna which should be connected to the terminals marked **"300Ω"**. This type of antenna is simple and practical and will give adequate results in primary signal areas. If you are located in a fringe signal area, an outdoor antenna will be necessary. Even if you live in a strong signal location, an outdoor directionnal antenna will give you better results.

We do not recommend using master antenna systems, such as those found in apartment buildings. Such systems are usually designed expressly for television reception and frequently suppress or reduce the quality of the FM signals before distribution.

Where outdoor antennas are prohibited or inconvenient, the simplest from of "rabbitear" TV antenna is the most practical and will give satisfactory results. This type is preferred over the folded dipole because it can be more readily rotated for the best reception.



www.hifiengine.com

## ② OUTDOOR AM ANTENNA

Two single wires are required to make an AM outdoor antenna. First, connect one single wire to the **AM ANTENNA** terminal on the rear panel, and the other end to a very high horizontal antenna wire of 7 to 20 meters in length suspended between insulators in an outdoor location (the higher the better). Next, connect the second single wire between the **G** terminal of your tuner and an authenticated earth ground.

## ③ AM LOOP ANTENNA

Your tuner is equipped with a high performance, noise-free **AM LOOP ANTENNA** held on the rear panel with a snap-in hinge. Swivel it out for best AM (MW, LW*) reception as shown in figure 4 . For improved AM (MW, LW*) reception remove the antenna from the hinge and hang it on a nearby wall. The length of the antenna cord is 60 cm and it should not be pulled tight.
* For Model ST430L

### AM LOOP ANTENNA CONNECTION

Securely connect the loop antenna leads to the **AM** and **G** terminals of the **"ANTENNA TERMINAL"** of the unit as shown in Fig. 4 .

## ④ OUTPUT JACKS

Connect the output jacks to the Tuner inputs of your amplifier with the cord supplied.

## ⑤ SCAN STEP SELECTOR

Changes the step when the tuner searches for the next station up and down the scale. In Europe this switch should be set for **50 kHz** steps in **FM** and **9 kHz** steps in **AM**.

**CAUTION**
THE UNIT MUST BE TURNED OFF BEFORE CHANGING THE SCAN STEP SELECTOR SWITCH POSITION.

## ⑥ FM DE-EMPHASIS SWITCH

A, N and T version models are equipped with switchable de-emphasis. In synthesizer models the switch works together with scan step switch.

The de-emphasis is set on **50 μs** when delivered from the factory. The tuner can also be used in areas of **75 μs**. In these areas, you must also set the scan step switch to **FM 100 kHz** and **AM** to **10 kHz**.

## ⑦ AC POWER CONNECTION

The correct voltage for operating your tuner is written on the rear panel. Be sure the **POWER** push-switch is out before plugging the AC line cord into an electrical outlet.

The voltage selector is installed on bottom side of the unit.

The AC mains-switch is secondary connected and doesn't disconnect the unit from the AC mains in "OFF" position.

# FRONT PANEL FEATURES

## ⑧ POWER/STANDBY SWITCH

When depressed supplies AC power to the unit.

## ⑨ FREQUENCY/MODE INDICATOR

The frequency received is indicated on the **FREQUENCY DISPLAY**. The tuner mode is also indicated as follows:

**AM** or **FM:** Indicates the band being received.

**MHz** or **kHz:** Indicates the unit of the frequency received: **MHz** for **FM** and **kHz** for **AM (MW, LW*)**.

* For Model ST430L

## ⑩ FM STEREO

Lights up when a stereo broadcast is received.



www.hifiengine.com

### (11) SIGNAL STRENGTH

Indicates the strength of the incoming signal: the greater the number of LED's lit, the stronger the signal.

### (12) BAND SELECTOR

Press the corresponding key to select FM or AM (MW, LW*).
* For Model ST430L

### (13) ELECTRONIC TUNING SWITCHES

When the **UP** or **DOWN** switch is depressed with the **SCAN MODE** switch set to **MANUAL** the frequency is scanned up or down in single steps in accordance with the position of the **SCAN STEP SELECTOR** switch. When the **UP** or **DOWN** key is pressed for more than 0.5 sec and the **SCAN MODE** switch is set to **AUTO** the frequency is scanned up or down continuously.

### (14) SCAN MODE

When in the **OUT** position automatic scanning is performed.

When in the **IN** position manual scanning is performed.

### (15) MODE SWITCH

When it is set to the **OUT** position the **MODE** is put into **STEREO**.

When it is set to the **IN** position the **MODE** is put into **MONO**.

When the **STEREO** indicator triggers intermittently press this switch to convert the signal to the **MONO** mode.

### (16) MEMORY SWITCH

Tune to the desired station, press the **MEMORY** switch and while the **MEMORY** light is on (10 sec.) press one of the 8 **PRESET** buttons.

### (17) PRESET BUTTONS 1-8

When one of these buttons is pressed the corresponding LED located above the buttons lights and the frequency stored in the corresponding memory is recalled in the mode determined by the position of the **BAND** selector. It is thus possible to memorize 8 stations each in FM and AM (MW'LW*).
* For Model ST430L

## TUNING PROCEDURES

The stereo tuner does not have a conventional tuning dial or tuning knob. There are two tuning methods: Preset tuning and Ordinary tuning.

### PRESET TUNING

A total of 16 stations [8AM (MW, LW*) and 8 FM] can be preset. Refer to **MEMORY SWITCH** on page 6 . Turning the tuner On and Off will not cause the tuner to "forget" the stations programmed. Built-in storage capacitors will supply power to the memory circuits for about one week if the unit is unplugged.
* For Model ST430L

### ORDINARY TUNING

Refer to **ELECTRONIC TUNING SWITCHES** page 6 .

## DESCRIPTION

Set the position of the tuner's loop antenna to obtain the best reception. (See Figure 5 )

It is also possible to remove the loop antenna and install it in a separate location. (See Figure 7 )



www.hifiengine.com

## MAINTENANCE

Only the most competent and qualified technicians should be allowed to service your system. The Marantz company and its factory trained technicians have the knowledge and special equipment needed for repair and calibration of this precision instrument.

In the event of difficulty refer to your dealer or write directly to one of the locations listed at the end of this manual for the name and address of the Marantz service station nearest your home. Please include the model and serial number of your unit together with a description of what you feel is abnormal in its behaviour.

## REPACKING FOR SHIPMENT

Should it become necessary to repack your Stereo Cassette Deck for shipment to the factory, to an authorized service station, or elsewhere, please observe the following precautions:

a. Pack the unit carefully, using the original material as shown in Figure 8

b. Ship via a reputable carrier (do not use Parcel Post) and obtain a shipping receipt from the carrier.

c. Be sure to include your return address on the shipping label.



www.hifiengine.com

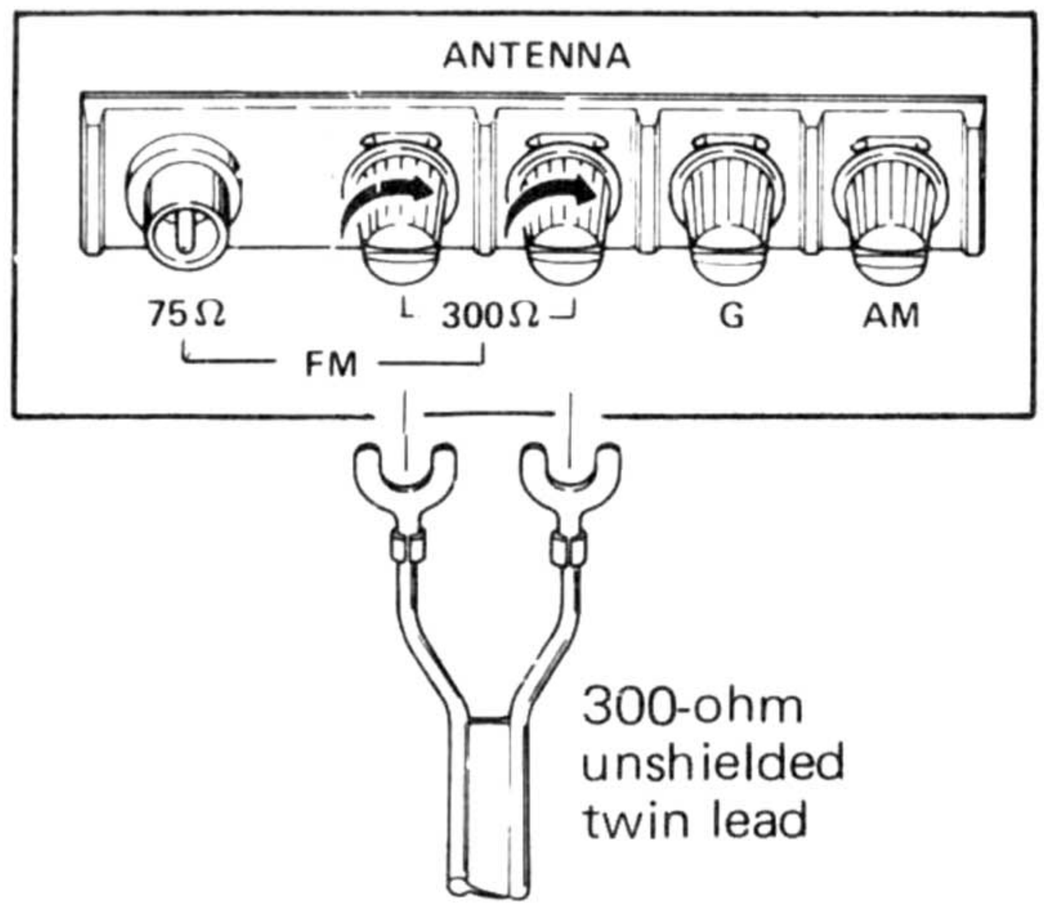


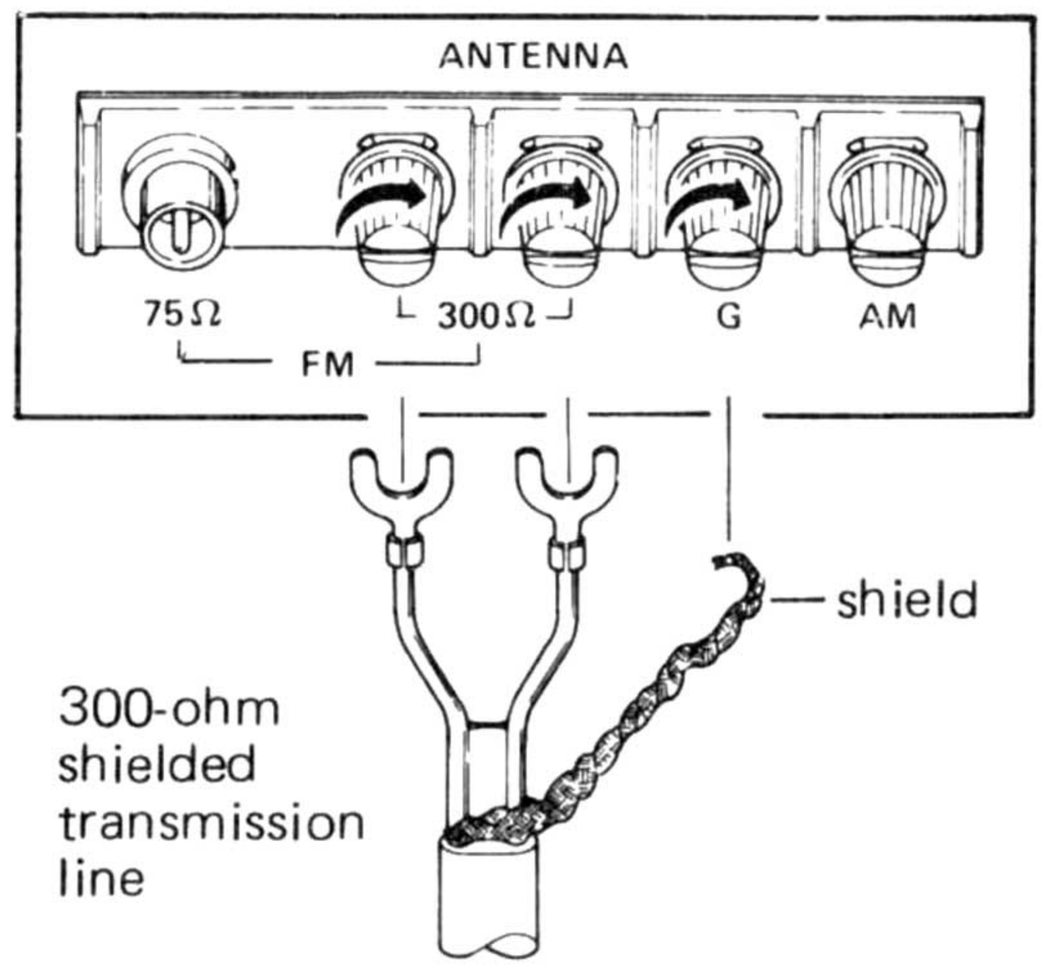


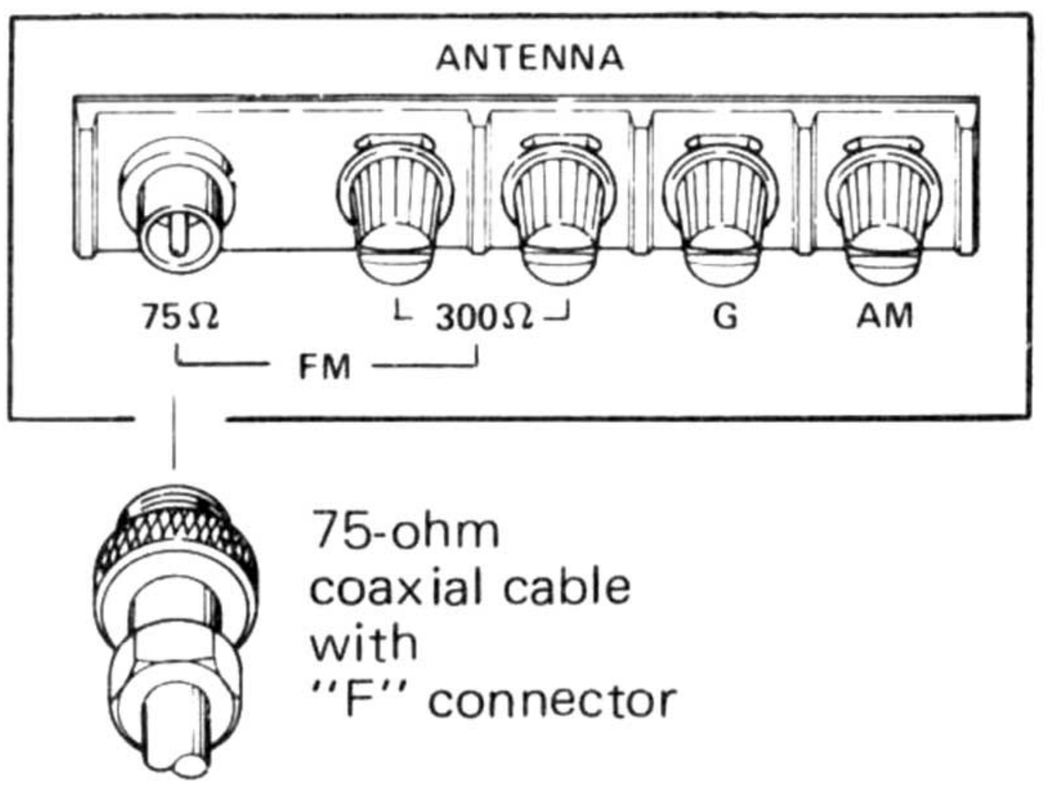


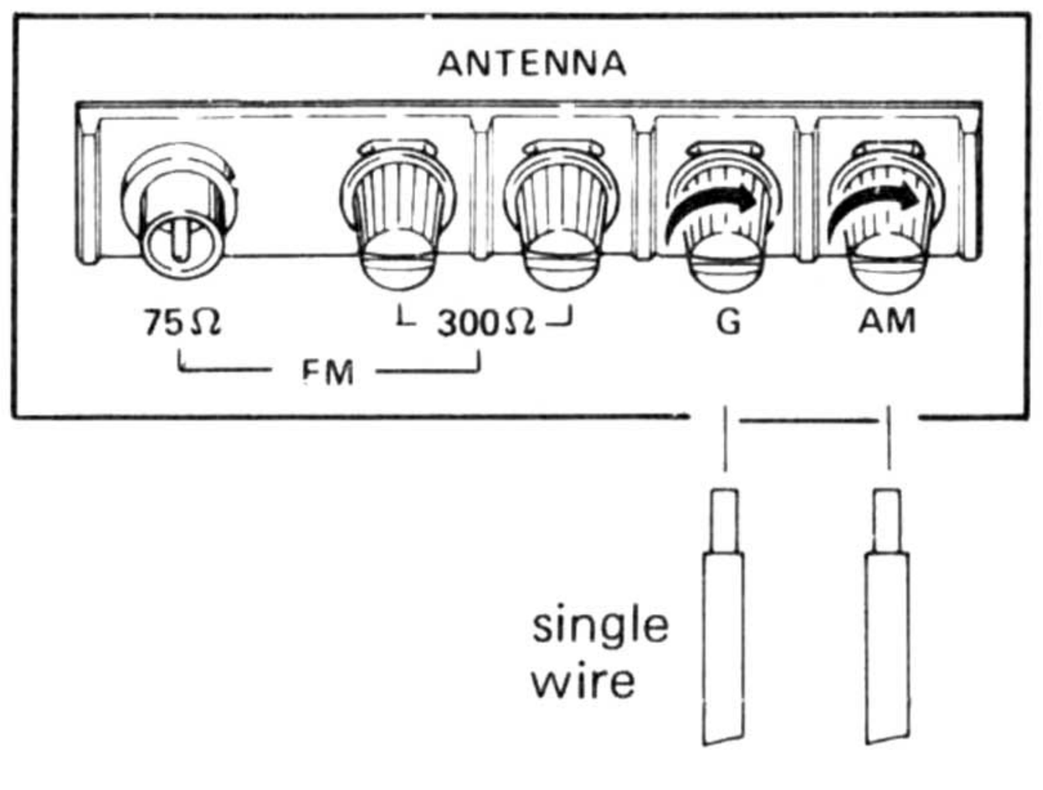


**Figure 3.**

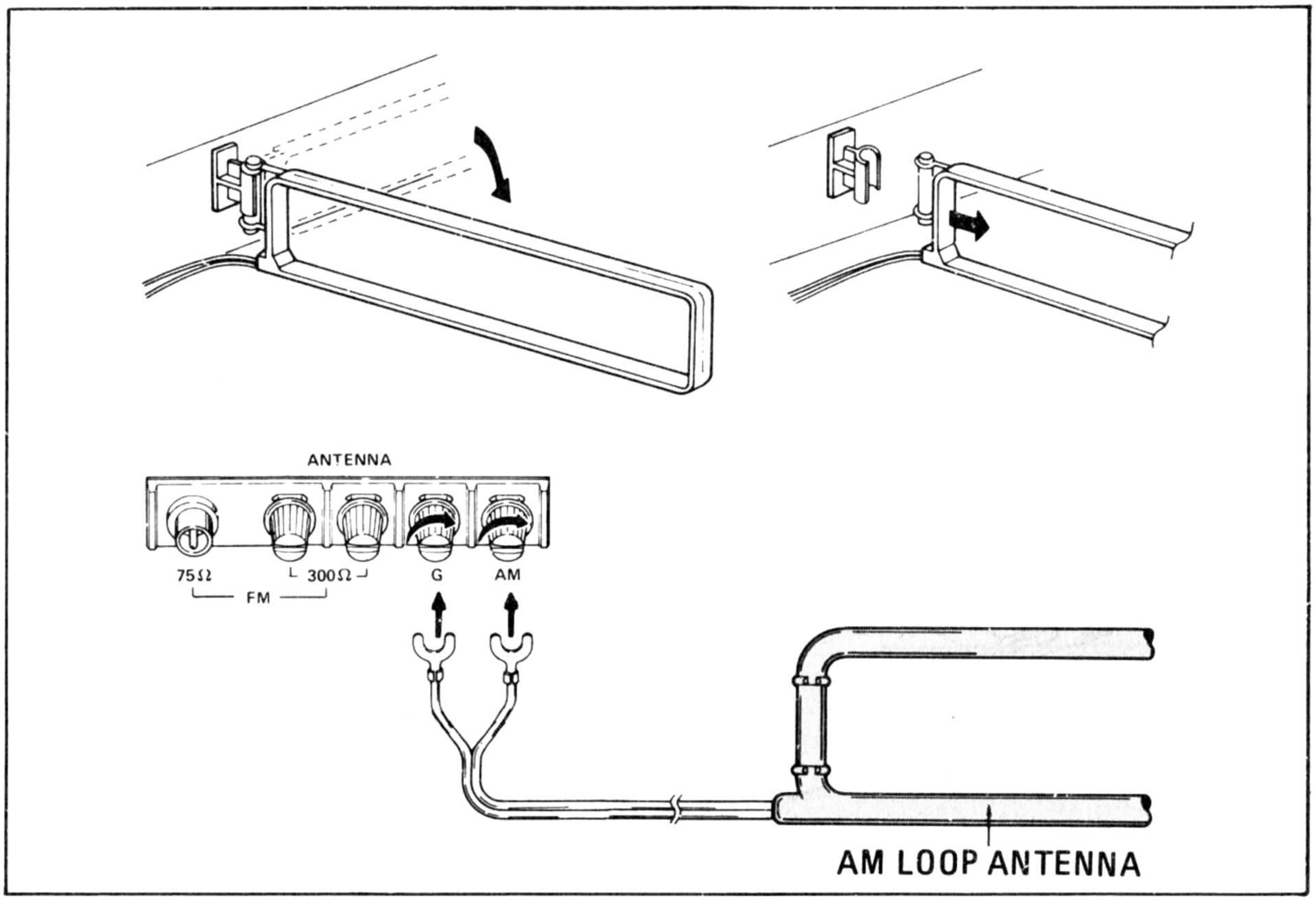


**Figure 4.**



www.hifiengine.com

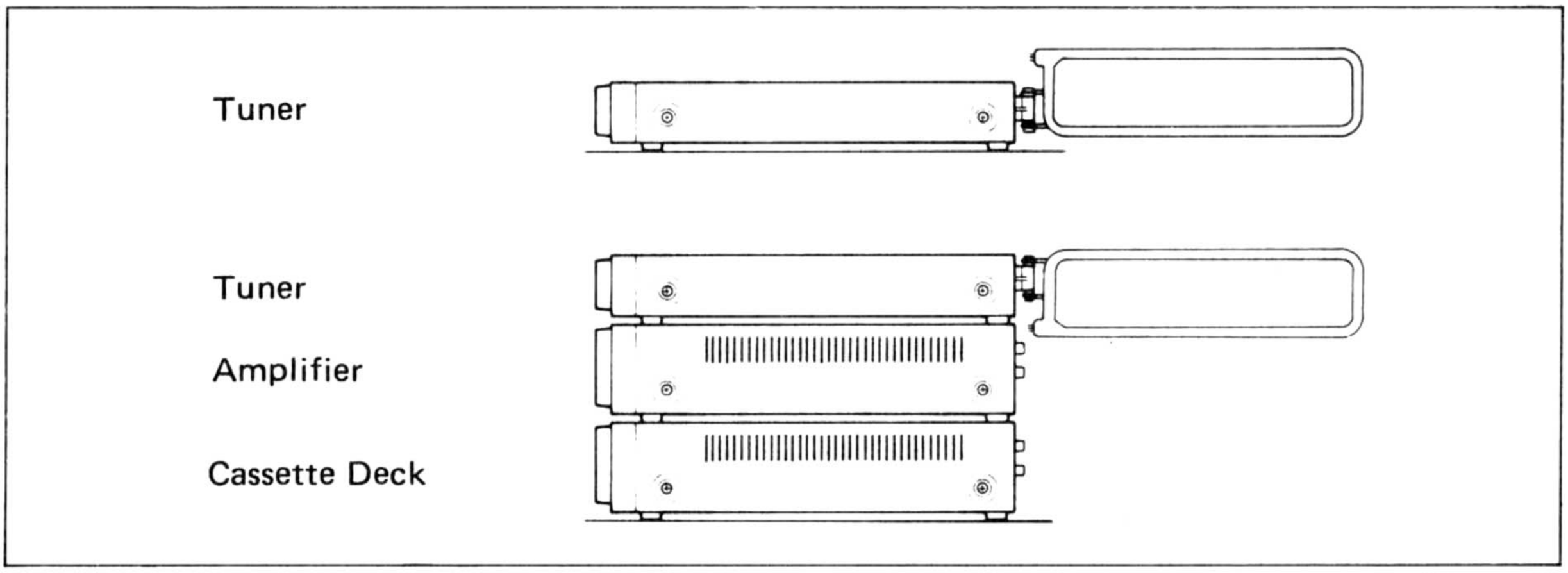


Figure 5.

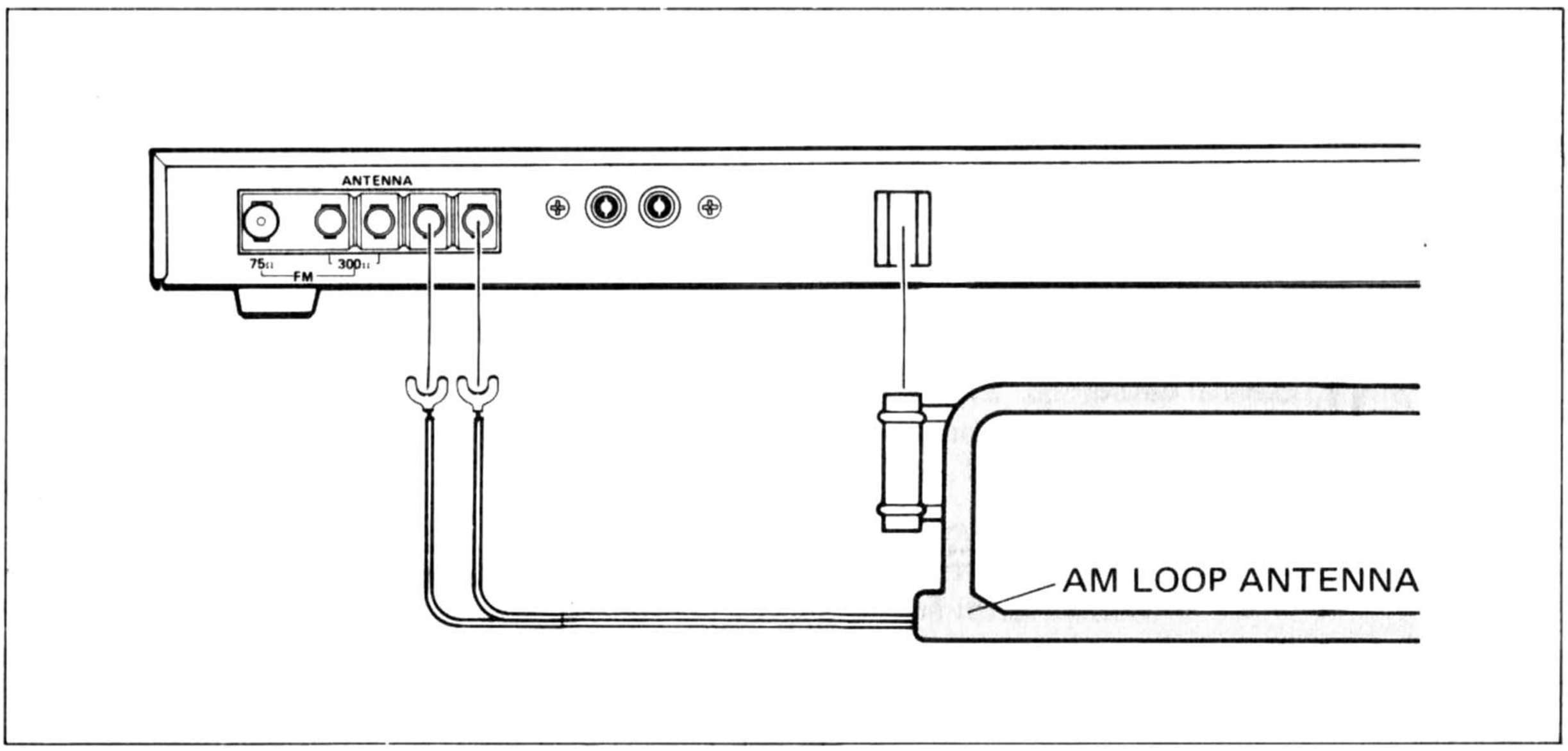


Figure 6.

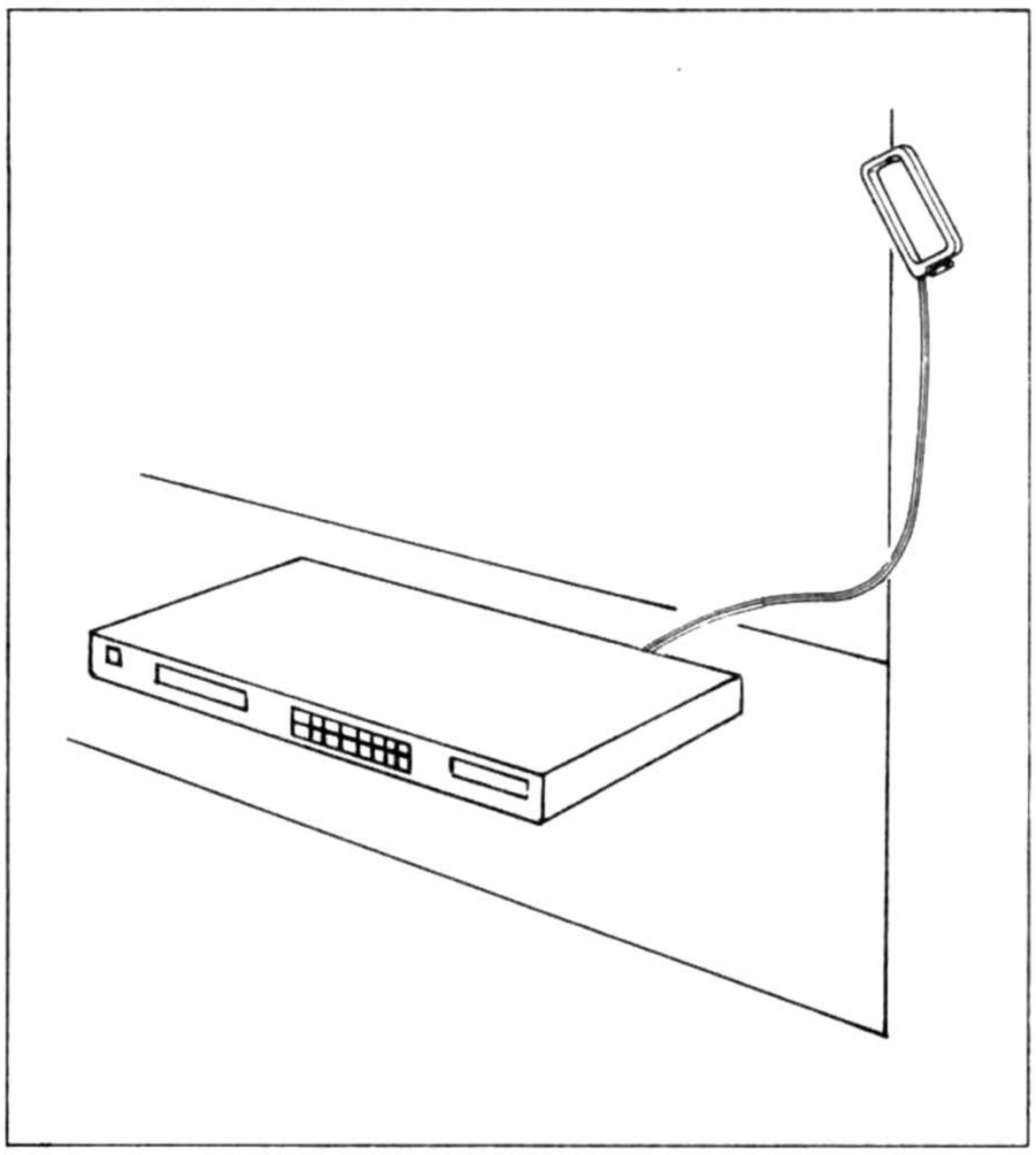

Figure 7.

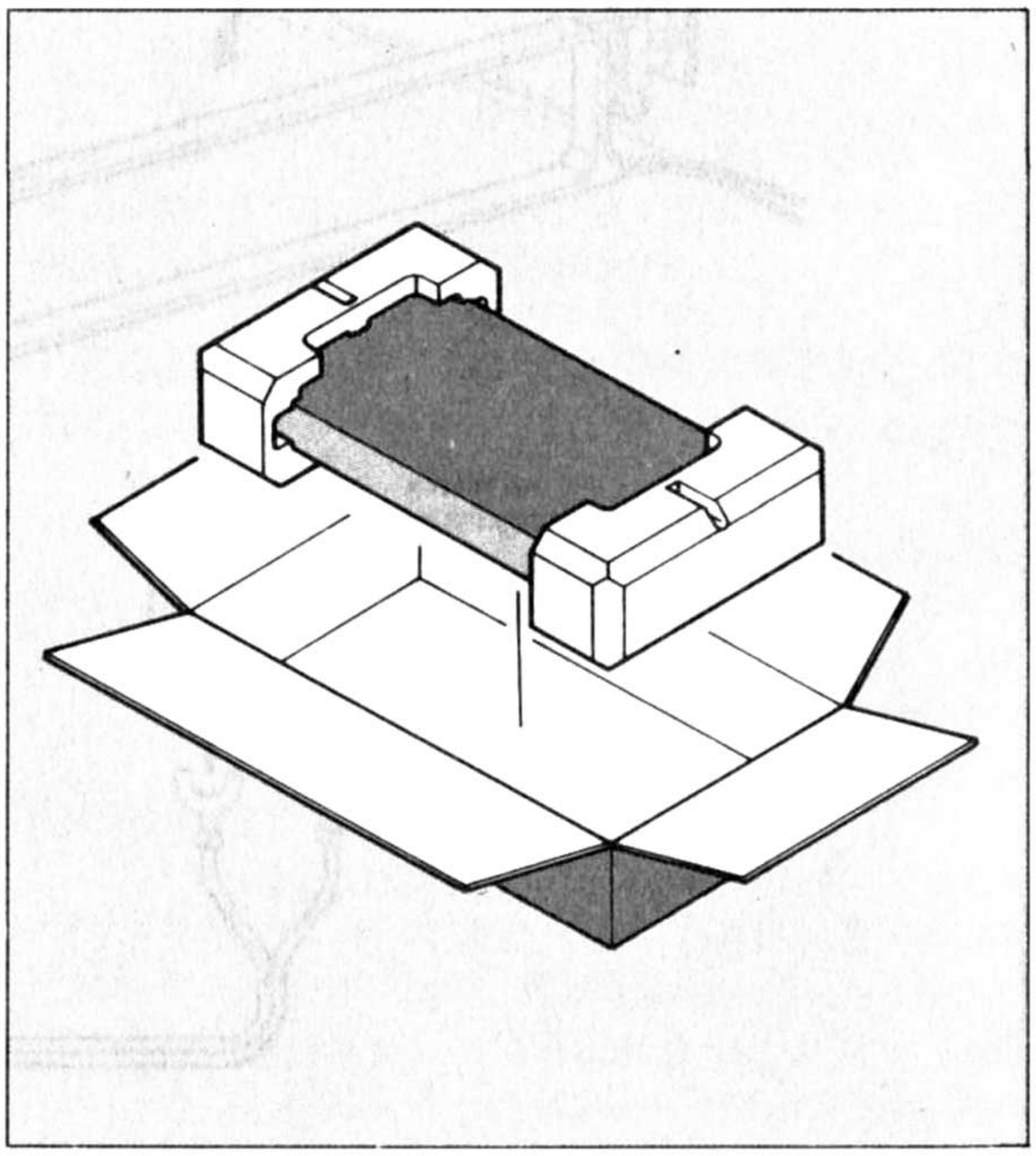

Figure 8.



www.hifiengine.com

# FUNCTIONAL BLOCK DIAGRAM

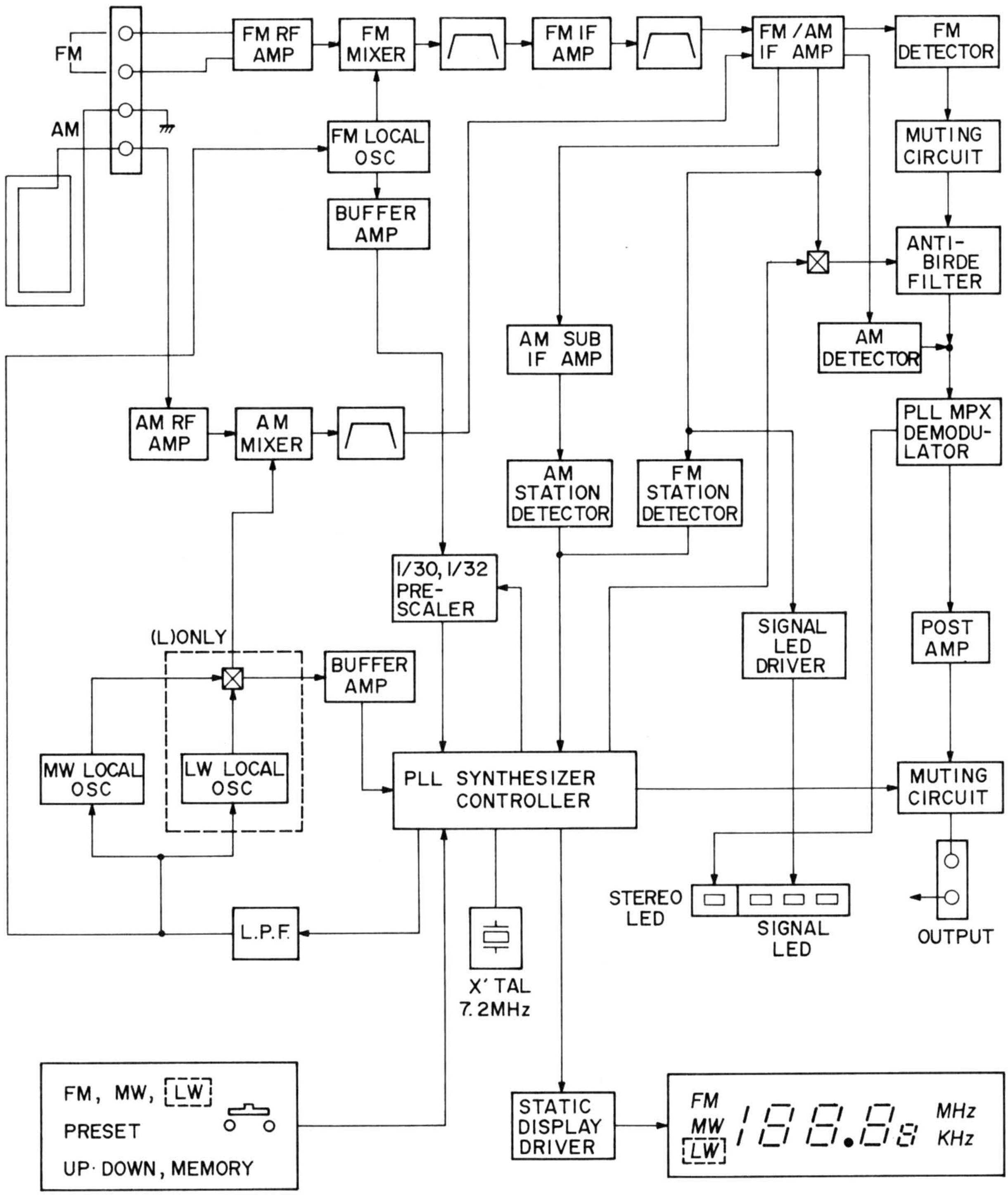




www.hifiengine.com

marantz

# SCHEMATIC DIAGRAM FOR Model ST430L

Q201 HC10006020 AN278
Q202 HC10035020 AN7273
Q301 HC10046020 AN7470
Q501 HC10070050 TC9147P
Q502 HC10071050 TD6301AP
Q503 HC10072050 TD6104P
Q506 HF200300B0 2SK30A YI
Q203~Q206 Q302~Q304 QA01~QA07, QA09, QA11, QA12 Q504, Q505, Q509~Q513 Q803~Q805 HT32785200 2SC2785 EF or FF
Q305 Q507, Q508 HT11175200 2SC1175 EF or FF
QA08, QA10 Q806 HT40863180 2SD863
Q801 HC10077030 L78M15
Q802 HC10107030 L78N06
DA01 HD40003420 KV1236Z
DA02, DA03 D801~D804 HD20022030 DSF10C
D201~D203, D301, D302 DA04, DA05, D501, D502 D503, D805~D807 HD20001000 1S1555, 1S2473 etc..
DS01~DS08 Hi10004080 SEL1124R(RED)
DS09 Hi10052020 LN250RPH(RED)
DY01~DY04 Hi10011080 SEL1213C(RED)
Q207 HC10008370 TL-489

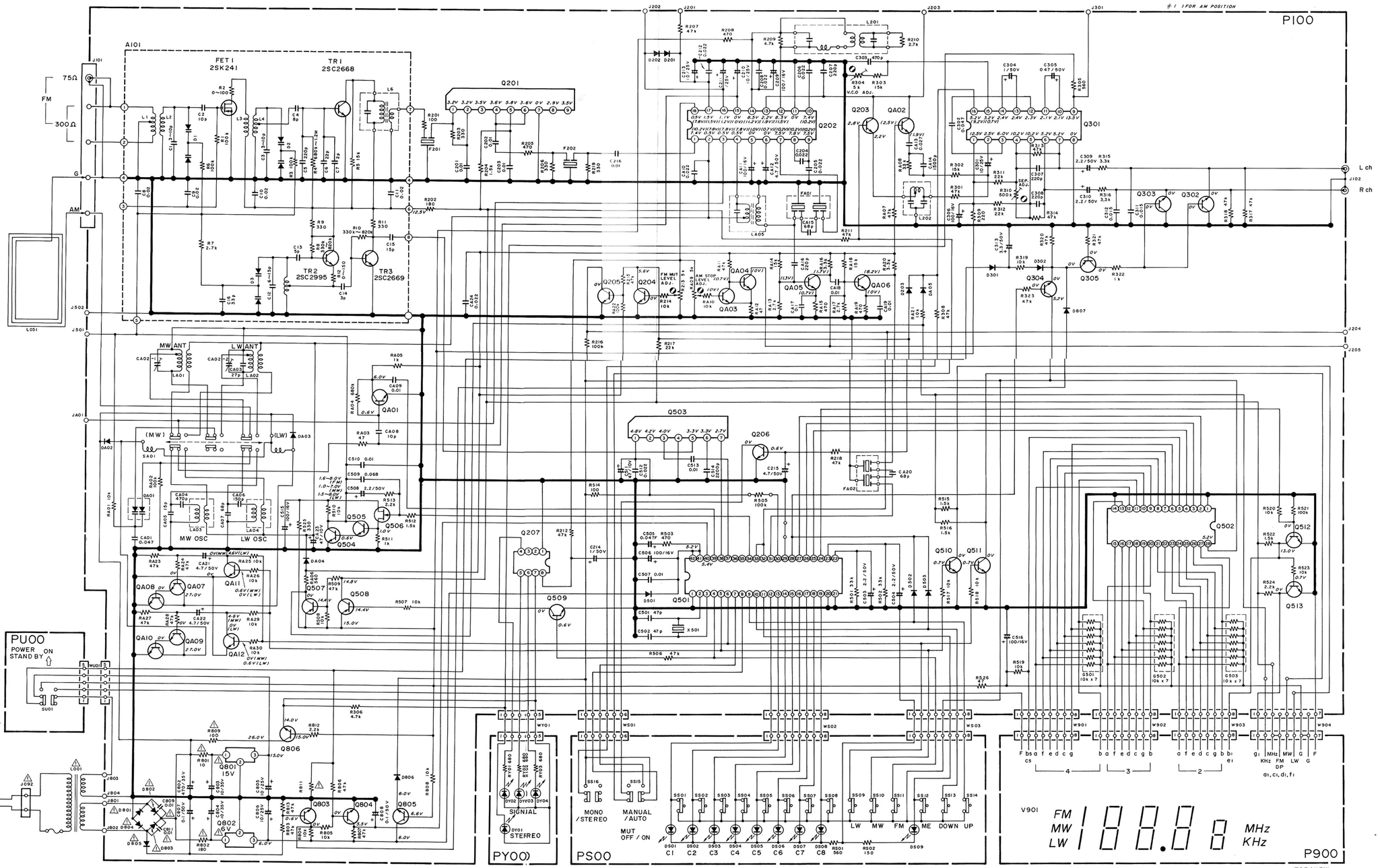
P100
A101
FET1 2SK241
TR1 2SC2668
TR2 2SC2995
TR3 2SC2669
Q201
Q202
Q203
QA02
Q301
Q302
Q303
Q304
Q305
QA03
QA04
QA05
QA06
Q204
Q205
QA01
Q503
Q206
Q502
Q501
Q504
Q505
Q506
Q507
Q508
Q509
Q510
Q511
Q512
Q513
QA11
QA07
QA08
QA09
QA10
QA12
Q207
Q801
Q802
Q803
Q804
Q805
Q806
PU00
POWER ON
STAND BY
PY00
SIGNAL
STEREO
PS00
MONO /STEREO
MANUAL /AUTO
MUT OFF / ON
LW MW FM ME DOWN UP
P900
V901
FM
MW
LW
MHz
KHz
L ch
R ch
75Ω
300Ω
FM
AM
MW ANT
LW ANT
MW OSC
LW OSC
(MW)
(LW)
SA01
LA01
LA02
LA03
LA04
LA05
L051
L201
L202
FA01
FA02
X501
F201
F202
J101
J102
J201
J202
J203
J204
J205
J301
J501
J502
J801
J803
J804
J092
W001
L001
PY01
PS01
P901
P902
P903
P904
SU01
WU01
SS01
SS02
SS03
SS04
SS05
SS06
SS07
SS08
SS09
SS10
SS11
SS12
SS13
SS14
SS15
SS16
DS01
DS02
DS03
DS04
DS05
DS06
DS07
DS08
DS09
DY01
DY02
DY03
DY04
D201
D202
D301
D302
D501
D502
D503
D807
D801
D802
D803
D804
DA01
DA02
DA03
DA04
DA05
CA01
CA02
CA03
CA04
CA05
CA06
CA07
CA08
CA09
CA20
CA21
CA22
CA23
CA24
CA25
CA26
CA27
CA28
CA29
CA30
CA31
CA32
CA33
CA34
CA35
CA36
CA37
CA38
CA39
CA40
CA41
CA42
CA43
CA44
CA45
CA46
CA47
CA48
CA49
CA50
CA51
CA52
CA53
CA54
CA55
CA56
CA57
CA58
CA59